Dart Aerospace Ltd.

Date: Tuesday 11/29/2005 3:00:22 PM
User: Linda Lucelle

SPLIT

Process Sheet

Customer : CU-DAR001 Dart Helicopters Services
Job Number : 25016
Estimate Number : 10530
P.O. Number : N/A
This Issue : 11/29/2005 S.O. No. : N/A
Prsht Rev. : NC
First Issue : N/A Type : MACHINED PARTS
Previous Run : 24837
Written By : SEE COMMENT BELOW
Checked & Approved By : SEE COMMENT BELOW
Comment : Est: 102.10.02 Re-format; Change to Dwg Rev. D & incorporated D2572KJ

Drawing Name : SADDLE FITTING, FWD (OUTBOARD/INBOARD)
Part Number : D2571
Drawing Number : D2571 REV D
Project Number : N/A
Drawing Revision : D
Material : N/A
Due Date : 1/5/2006 Qty: ~~8~~ 16 Um: Each

Additional Product

Job Number:

Seq. #:	Machine Or Operation:	Description :
1.0	D6101007	7075-T7351 8.25X7.75X2.5

Comment: Qty.: 1.0000 Each(s)/Unit Total : 8.0000 Each(s)
7075-T7351 8.25X7.75X2.5
Make from D6101-007 billet for D2571
Ensure that grain is along 7.75" length
Batch No: 34205 J.G. 06/01/29

2.0	HAAS1	HAAS CNC VERTICAL MACHINING #1

Comment: HAAS CNC VERTICAL MACHINING #1
Program Batch No. 25016 Double check by: SA

1-Machine Step No 1 per Folio FA051 and inspect per attached Dimension Sheets
2-Machine Step No 2 per Folio FA051 and inspect per attached Dimension Sheets
3-Machine Step No 3 per Folio FA051 and inspect per attached Dimension Sheets
4-Deburr and remove all machining marks
5-Tumble to remove sharp edges.

J.G 06/01/29

3.0	MILLING CONV.	CONVENTIONAL MILLING MACHINE

Comment: CONVENTIONAL MILLING MACHINE
Machine keyway as per dwg D2571 & D2572 J.G 06/01/29

4.0	QC2	INSPECT PARTS AS THEY COME OFF MACHINE

Comment: INSPECT PARTS AS THEY COME OFF MACHINE J.G. 06/01/29

Form: rprocess

esday, 11/29/2005 3:00:22 PM
Linda Lacelle

Process Sheet

stomer: CU-DAR001 Dart Helicopters Services

Drawing Name: SADDLE FITTING, FWD (OUTBOARD/INBOARD)

ob Number: 25016

Part Number: D2571

ob Number:

Seq. #:	Machine Or Operation:	Description :
5.0	QC8	SECOND CHECK
	Comment: SECOND CHECK	BG 06.02.30
6.0	HAND FINISHING1	HAND FINISHING RESOURCE #1
	Comment: HAND FINISHING RESOURCE #1 Acid etch and Alodine as per QSI 005 4.1	FF 06-02-09 2
7.0	POWDER COATING	POWDER COATING
	Comment: POWDER COATING Powder Coat White Gloss (Ref: 4.3.5.1) as per QSI 005 4.3	M 06 02 10 2
8.0	QC3	INSPECT POWDER COAT/CHEMICAL CONVERSION
	Comment: INSPECT POWDER COAT	06/2/13 (2)
9.0	PACKAGING 1	PACKAGING RESOURCE #1
	Comment: PACKAGING RESOURCE #1 Identify and Stock Location: St 478	06/2/13 (2)
10.0	DC	DOCUMENT CONTROL
	Comment: DOCUMENT CONTROL Inspection Level 21	06/02/14 (2) 06/02/14 (2)

Job Completion

Form: rprocess

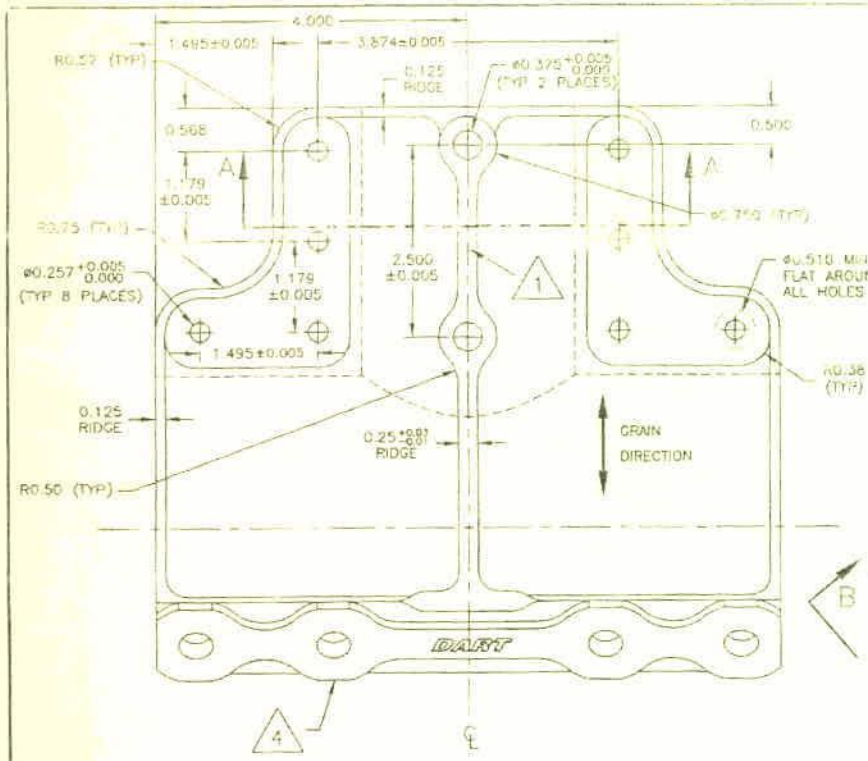

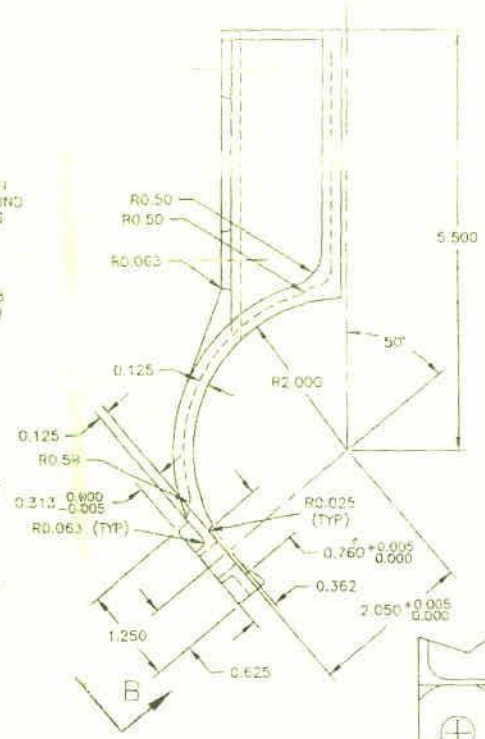

NOTES

MATERIAL: 7075-T7351 (QQ-A-250/12) (REF DART SPEC 76.02-001)
FINISH: ALODYNE, COLOUR PER TSR A1177
POWDER COAT GLOSS WHITE (REF 4.375.1) PER DART QSI 005 4.3
BREAK ALL SHARP EDGES 0.010 TO 0.020
TOLERANCES ARE PER DART QSI 018 UNLESS OTHERWISE NOTED

1. ENGRAVE PART AND BATCH NUMBER IN THIS AREA TO MAX DEPTH OF 0.010
2. ENGRAVE DART LOGO TO MAX DEPTH OF 0.015 WITH MIN RAD 0.125
3. CHAMFER 0.063" x 45° AROUND THIS SURFACE (TYPICAL 2 PLACES)
4. CHAMFER 0.063" x 45° ALL AROUND

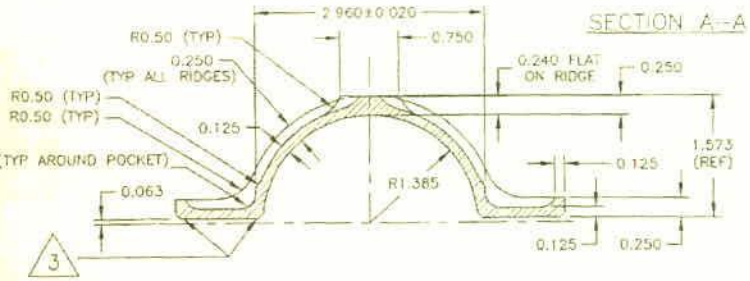

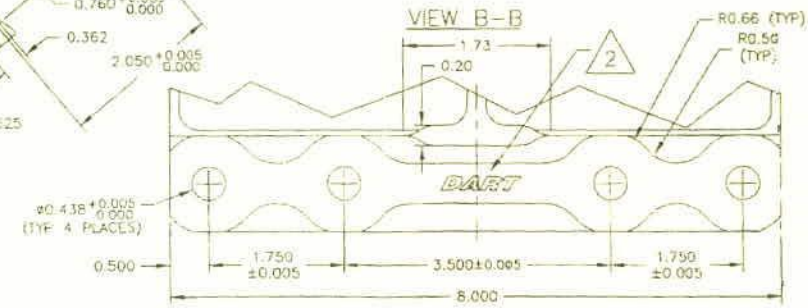

D	02.09.06	ADD RIDGES; TIGHTEN TOLERANCES
C	99.10.22	INCORP. DEO 9123/9079/9102 ADD DIMENSIONS PER TSR A1177
B	96.12.02	ADD GRAIN DIR., 0.438 WAS 0.425
A	96.09.16	NEW ISSUE

DESIGN	DRAWN BY	DART	DART AEROSPACE LTD. HAMMERSBURY, ONTARIO, CANADA
CHECKED	APPROVED	DRAWING NO. D2571	REV. 0 SHEET 1 OF 1
DATE 02.09.06		TITLE OUTER FWD SADDLE	SCALE 2:3

RT AEROSPACE LTD	Work Order:	
Description: Saddle, Fwd Outboard	Part Number:	D2571
Inspection Dwg: D2571 Rev. D		Page 1 of 1

Inspect dimensions highlighted on inspection sheet drawing D2571 Rev. D and record below:

				Recorded Actual Dimensions					
Dim	Min	Max	Go/No Go Gauge	1	2	3	4	By	Date
A	0.438	0.443	DT8682	0.440	0.440				
B	1.745	1.755		1.750	1.750				
C	3.495	3.505		3.500	3.500				
D	1.745	1.755		1.749	1.750				
E	7.990	8.010		8.005	8.004				
F	0.490	0.510		0.500	0.492				
G	0.257	0.262	DT8683	0.258	0.258				
H	0.375	0.380	DT8684	0.376	0.376				
I	0.490	0.510		0.501	0.498				
J	1.174	1.184		1.180	1.179				
K	0.558	0.578		0.569	0.568				
L	1.174	1.184		1.179	1.179				
M	1.490	1.500		1.495	1.495				
N	2.495	2.505		2.500	2.501				
O	3.869	3.879		3.872	3.873				
P	0.115	0.135		0.127	0.125				
Q	0.115	0.135		0.135	0.135				
R	0.240	0.260		0.244	0.248				
S	0.115	0.135		0.123	0.124				
T	0.178	0.198		0.188	0.188				
U	2.940	2.980		2.962	2.961				
V	0.230	0.250		0.240	0.236				
W	0.115	0.135		0.119	0.120				
X	0.308	0.313		0.310	0.310				
Y	0.760	0.765		0.760	0.761				
Z	0.352	0.372		0.362	0.362				
AA	0.470	0.530		0.500	0.500				
AB	0.615	0.635		0.630	0.631				
AC	0.053	0.073		0.063	0.063				
AD	0.240	0.260		0.249	0.250				
AE	1.375	1.395		1.384	1.383				
AF	0.115	0.135		0.135	0.135				
AG	0.240	0.280		0.266	0.261				
AH	0.240	0.260		0.250	0.251				
		Accept/Reject							

Measured by:	[illegible]	Audited by	BG
Date:	[illegible] 09	Date:	06.01.30

Rev	Date	Change	Revised by	Approved
A		New Issue	RF	
B	02.09.24	Re-format; Added Rev. D	KJ	
C	02.10.11	Re-format; Added DT8682, DT8683, DT8684	KJ	